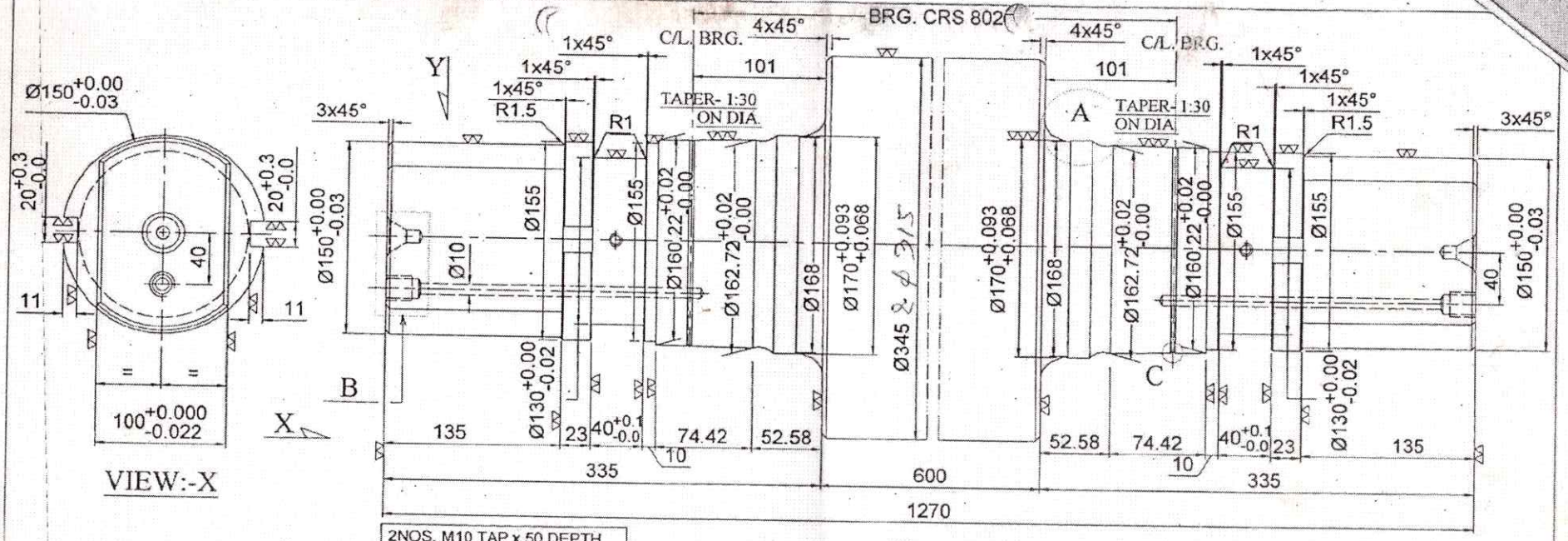

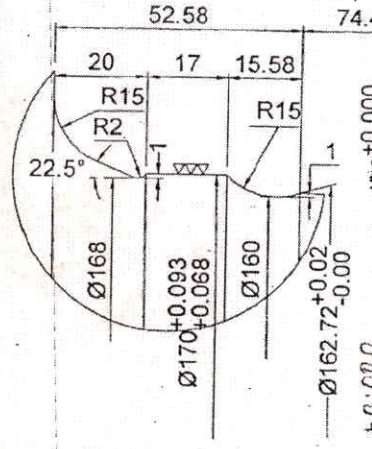

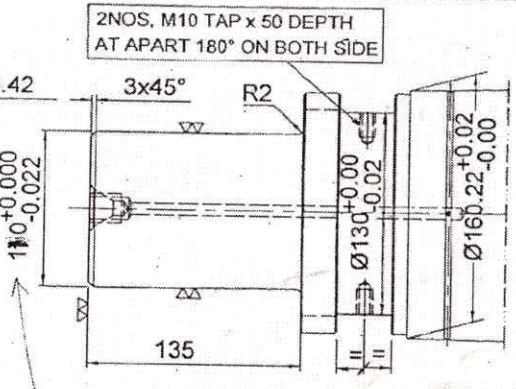

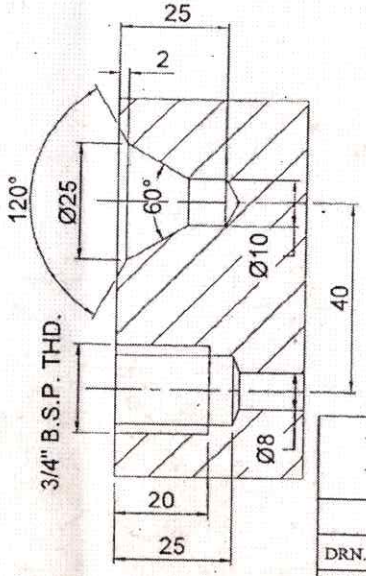

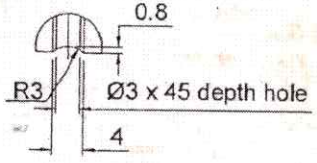

+0.000 -0.022
A/F 110
10/11/2017

28/3/18

DEEM ROLL TECH LTD.

Ø315x600.R

	NAME	DATE	TITLE: ROLL (Ø345 x 600) (FOR BRG.NO.24032K MBW 33C3 K30)
DRN.	A.M	29.10.17	
CHKD.	D.D.	04.11.17	CUSTOMER: MS AGARWAL FOUNDRIES PVT. LTD.
REF.	(Brg.no.24032K)		
SCALE:- 1:4			DRG. NO.: DRL/AFL/001/25 REV.NO.-0

TAPER BEARING TYPE:24032K MBW/33C3/K30